Safety systems for small wind turbines
which turn the rotor out of the wind at high wind speeds

ing. A. Kragten

February 2012

KD 485

Engineering office Kragten Design
Populierenlaan 51
5492 SG Sint-Oedenrode
The Netherlands
telephone: +31 413 475770
e-mail: info@kdwindturbines.nl
website: www.kdwindturbines.nl

Contains page

1 Introduction

In the winter of 2012 I have given a wind energy course in the district Woensel-West of the Dutch town Eindhoven to seven people. This course was meant to transfer the basic knowledge of windmill rotors, safety systems, generators and electronics of small windmills because people of the group have the intention to build their own windmill. The first three course evenings were spent on rotor design and matching. Report KD 35 (ref. 1) was used for this course part.

During the fourth evening, several safety systems were explained using KD-reports which I have written about every single safety system. But no report is available in which a short description of all safety systems is presented. This report KD 485 fills that gap and is about a summary of the fourth course evening.

Large wind turbines have safety systems which work on pitch control. This means that the blade angle is increased or decreased and this reduces the power and the rotational speed. The blade angle is generally controlled by a computer which can be steered by different parameters like the rotational speed, the voltage, the power or the wind speed. Medium size wind turbines can also have a pitch control system but this system is generally activated by the centrifugal force acting on the blades or on separate weights, or by the rotor thrust.

Small wind turbines generally have safety systems which turn the rotor out of the wind at high wind speeds. The driving force is normally the rotor thrust. The main advantage of these systems is that no complex pitch control system is needed so the rotor can have blades with a fixed connection of the blades to the hub.

Several systems have been developed during the past hundreds of years. The oldest systems were used for water pumping windmills. An overview of systems for water pumping windmills with slow running rotors is given in report R 999 D which I wrote already in 1989. These systems can also be used for electricity generating windmills with fast running rotors if some special qualities of fast running rotors are taken into account. But report R 999 D is no longer available and needs correction on several points. The knowledge is increased in the mean time and therefore I have written separate reports for the main safety systems.

A windmill rotor can be turned out of the wind in two directions. Most common is to turn it out of the wind around the vertical tower axis but some suppliers turn the rotor out of the wind around a horizontal axis. In chapter 3, three systems will be described which turn the rotor out of the wind along a vertical axis and two systems will be described which turn the rotor out of the wind along a horizontal axis.

In chapter 2 of R 999 D, the reasons are given why a safety system is necessary. These reasons are:

1 Limitation of the axial force or thrust on the rotor to limit the load on the rotor blades, the tower and the foundation.

2 Limitation of the rotational speed of the rotor to limit the centrifugal force in the blades, imbalance forces, high gyroscopic moments in the blades and the rotor shaft, to prevent flutter for blades with low torsion stiffness and to prevent too high rotational speeds of the load which is relevant for limitation of heat dissipation in a generator or for limitation of shock forces in the transmission to a piston pump.

3 Limitation of the yawing speed to limit high gyroscopic moments in the blades and the rotor shaft.

2 The ideal δ-V curve

Generally it is wanted that the windmill rotor is perpendicular to the wind up to the rated wind speed V_{rated}, and that the rotor turns out of the wind such that the rotational speed, the rotor thrust, the torque and the power stay constant above V_{rated}. It appears to be that the component of the wind speed perpendicular to the rotor plane determines these four quantities. The yaw angle δ is the angle in between the wind direction and the rotor axis. The component of the wind speed perpendicular to the rotor plane is therefore V cosδ.

The formulas for a yawing rotor for the rotational speed n_δ, the rotor thrust $F_{t\delta}$, the torque Q_δ and the power P_δ are given in chapter 7 of report KD 35 (ref. 1). These formulas are copied as formula 1, 2, 3 and 4.

$$n_\delta = 30 * \lambda * \cos\delta * V / \pi R \qquad \text{(rpm)} \qquad (1)$$

$$F_{t\delta} = C_t * \cos^2\delta * ½\rho V^2 * \pi R^2 \qquad \text{(N)} \qquad (2)$$

$$Q_\delta = C_q * \cos^2\delta * ½\rho V^2 * \pi R^3 \qquad \text{(Nm)} \qquad (3)$$

$$P_\delta = C_p * \cos^3\delta * ½\rho V^3 * \pi R^2 \qquad \text{(W)} \qquad (4)$$

These four quantities stay constant above V_{rated} if the component of the wind speed perpendicular to the rotor plane is kept constant above V_{rated}. So in formula:

$$V \cos\delta = V_{rated} \qquad (\text{for } V > V_{rated}) \qquad (5)$$

It is assumed that the rotor is loaded such that it runs at the design tip speed ratio λ_d. If the wind speed is in between 0 m/s and V_{rated}, the n-V curve is a straight line through the origin. The F_t-V and the Q-V curves are then parabolic lines and the P-n curve is a cubic line.

Formula 5 can be written as:

$$\delta = \text{arc cos } (V_{rated} / V) \qquad (°) \qquad (6)$$

This formula is given as a graph in figure 1 for different value of V / V_{rated}. The value of δ has been calculated for V / V_{rated} is respectively 1, 1.01, 1.05, 1.1, 1.25, 1.5, 2, 2.5, 3, 4, 5 and 6.

The rated wind speed V_{rated} is chosen on the basis of the maximum thrust and the maximum rotational speed which is allowed for a certain rotor and a certain generator. Mostly V_{rated} is chosen about 10 m/s. For the chosen value of V_{rated}, figure 1 can be transformed into the δ-V curve for which V (in m/s) is given on the x-axis. If it is chosen that V_{rated} = 10 m/s, figure 1 becomes the δ-V curve if all values on the x-axis are multiplied by a factor 10.

In figure 1 it can be seen that the rotor is perpendicular to the wind for $(V / V_{rated}) < 1$ but that the required change in δ is very sudden if V / V_{rated} is a very little higher than 1. So even if one would have a safety system which theoretically has the ideal δ-V curve, in practice this curve will not be followed because the inertia of the system prevents sudden changes of δ around $V / V_{rated} = 1$. So the system will turn out of the wind less than according to the ideal δ-V curve. This will result in a certain overshoot of the rotational speed and the thrust.

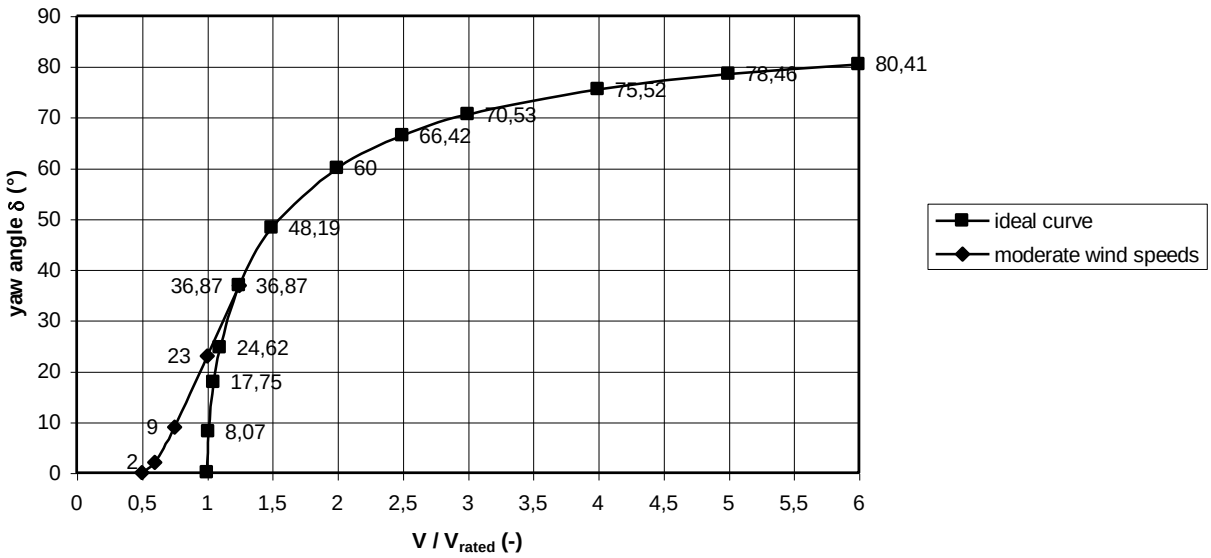

fig. 1 the δ-V/V_{rated} curve for the ideal safety system

For high values of V / V_{rated}, a certain increase of V, and therefore a certain increase of V / V_{rated}, requires only a relatively small increase of δ. It is therefore much easier to follow the theoretical δ-V curve at high wind speeds. Because of this effect, it is practically impossible to follow the ideal δ-V curve for wind speeds lower than about 1.25 * V_{rated} and the practical δ-V curve must therefore start increasing already at a much lower wind speed than the theoretical rated wind speed. An example of a practical δ-V curve for moderate wind speeds is also given in figure 1. Even for this practical curve for moderate wind speeds and for the ideal curve for values of V / V_{rated} > 1.25, there will be a certain overshoot of n and F_t because of inertia effects.

In figure 11 of R 999 D, a system is described which follows the theoretical δ-V curve as good as possible. The rotor is positioned such that the tower axis lies in the rotor plane. The side force on the rotor therefore exerts no moment around the tower axis. The eccentricity is chosen rather large and the so called self orientating moment, which has a tendency to turn the rotor in the wind, is therefore small with respect by the moment which is exerted by the rotor thrust. The vane rotates around the same axis as the tower and makes a pre-angle with the rotor axis if the vane arm hits the stop which is positioned on the head. A weight is connected to the vane arm by means of a cable which is guided along two wheels. This construction realises a constant torque in between vane arm and head for every position of the vane arm if the vane arm is free from the stop. A constant moment of the vane arm results therefore in a constant rotor moment around the tower axis and so in a constant rotor thrust for V > V_{rated}.

Figure 11 from R 999 D is copied as figure 2. Although this system will have a δ-V curve which will lie very close to the theoretical curve, it has certain very large practical disadvantages like the complex head construction. Practical solutions generally deviate strongly from figure 2 but this may introduce other disadvantages.

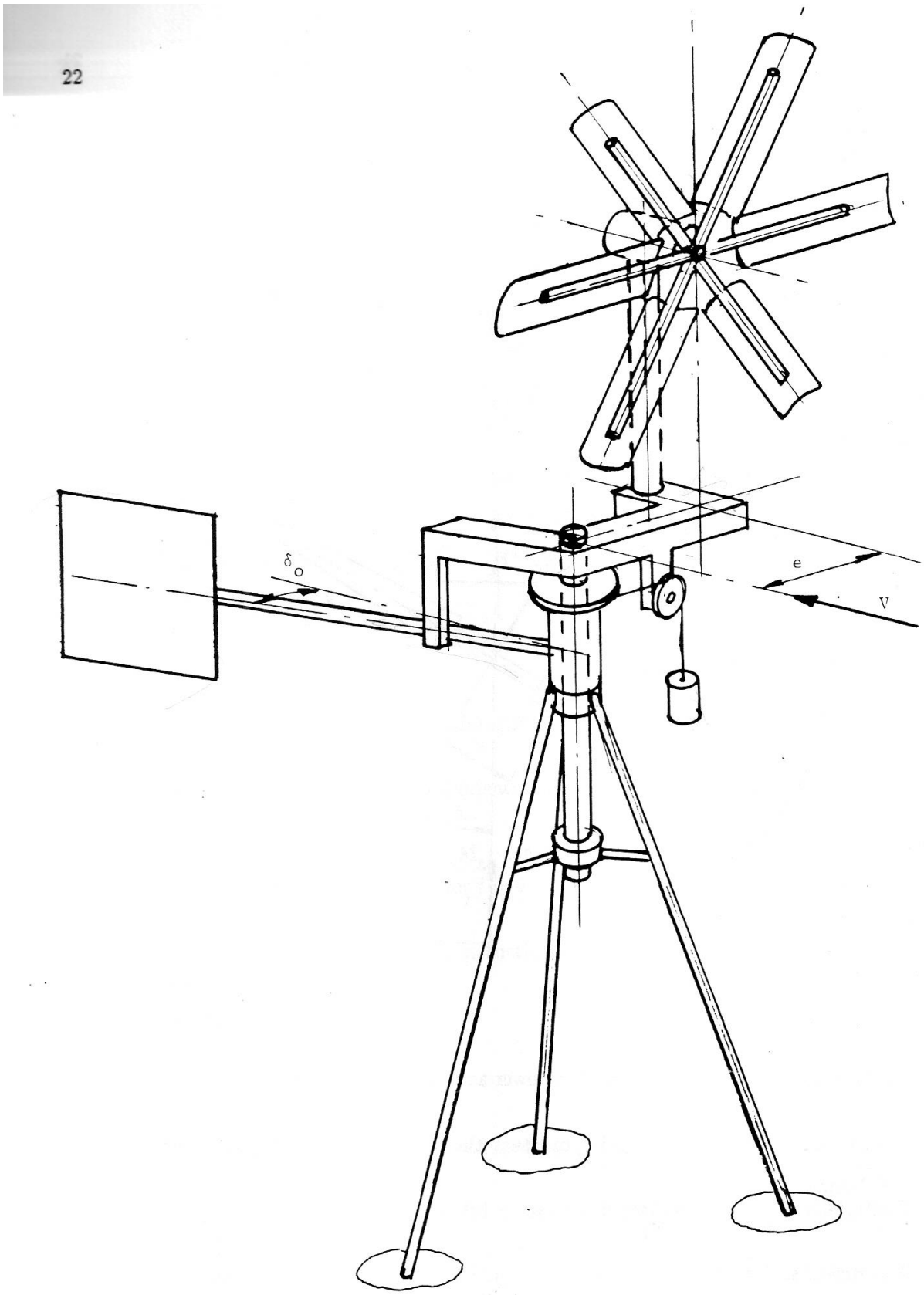

fig. 2 Artist impression of a safety system which follows the ideal δ-V curve

3 Description of five systems for which the rotor is turned out of the wind

A rough description of the functioning of a certain system is something completely different as the physical and mathematical description which are required to predict the δ-V curve. In this report KD 485 only a rough description of each system is given. The physical and mathematical description are given in the relevant KD report. For certain systems, the required physical and mathematical description to predict the δ-V curve is very complicated and I have not succeeded to find one formula for the δ-V curve. But an estimated δ-V curve can be checked by iteration using the formulas for the moment equations. Some systems can be described mathematically rather easy. It doesn't mean that, if it is not possible to describe a system mathematically, it can't work properly in practice. But in this case, the optimum design parameters have to be found by try and error.

The oldest systems have names which are widely accepted but for other systems the name is defined during the period 1975 – 1990 when I worked at the University of Technology Eindhoven. The names for the two systems which turn out of the wind along a horizontal axis are given recently. The three systems which turn out of the wind along a vertical axis are called:

1 Ecliptic safety system with a torsion spring, described in report KD 409 (ref. 3).
2 Hinged side vane safety system, described in report KD 213 (ref. 4) and KD 223 (ref. 5).
3 Inclined hinge main vane safety system, described in report KD 431 (ref. 6).

The two systems which turn out of the wind along a horizontal axis are called:

4 Pendulum safety system, described in report 377 (ref. 7).
5 Pendulum safety system with a torsion spring, described in report KD 439 (ref. 8).

3.1 Ecliptic safety system with a torsion spring (see KD 409, ref. 3)

The ecliptic safety system is widely used in old fashioned water pumping windmills. The name of the system probably comes from the water pumping windmill of manufacture Eclipse which is equipped with this system. The ecliptic system can be used in combination with an eccentrically placed rotor or with a centrally placed rotor and an auxiliary vane. Only the use in combination with an eccentrically placed rotor will be taken into account.

The main feature of a normal ecliptic safety system is that the main vane is turning around a vertical axis and that the vane arm it is pulled against a stop by a tension spring. The geometry of the rotor, the head and the vane are chosen such that the rotor is perpendicular to the wind direction as long as the vane arm makes contact with the stop. The pulling force in the spring exerts a certain moment M_{spring} around the vane axis. M_{spring} depends on the distance in between the hart of the spring and the vane axis and so it depends on the position of the vane arm. The pulling force in the spring depends on the spring characteristics.

The vane arm is touching the stop as long as M_{spring} is larger than the moment M_{vane} exerted by the aerodynamic force on the vane blade around the vane axis. At a certain critical wind speed called V_{crit}, M_{vane} becomes larger than M_{spring} and the vane turns away. The rotor exerts a certain rotor moment M_{rotor} around the tower axis. This rotor moment is mainly determined by the rotor thrust $F_{t\delta}$ and the eccentricity e but the side force on the rotor $F_{s\delta}$ in combination with the distance f in between the rotor plane and the tower axis and the so called self orientating moment M_{so} also have a certain influence. If M_{rotor} becomes larger than the moment of the vane around the tower axis, the rotor starts turning out of the wind. This is the case for wind speeds higher than V_{crit} when the vane arm is no longer in contact with the stop.

How the rotor turns out of the wind as a function of the wind speed is difficult to determine, especially if the vane blade is in the rotor shadow where the wind speed is not well known. Another disadvantage of the ecliptic system is that, if the rotor is turned out of the wind a lot and if the wind speed suddenly decreases, the vane arm will move back to its zero position. It will hit the stop with a large force if the stop is not elastic. To prevent that the vane arm can touch the rotor at high wind speeds, another stop is needed at a position where the vane arm is about parallel to the rotor plane.

To realise rather simple mathematical formulas I have made a description for an ecliptic system which differs from the normal ecliptic system on several points. The differences are:

a) A torsion spring will be used. The spring moment M_{spring} will therefore increase linear to the angle γ over which the vane arm turns.
b) The vane arm will point upwards with an angle of 45° and will be so long that the vane blade is in the undisturbed wind speed V. The vane blade will be square and will be positioned such that two sides are horizontal. The angle in between the vane blade and the wind direction is called α.
c) There will be an elastic stop at the zero position of the vane arm for $\gamma = 0°$ and a second elastic stop at a position for $\gamma = 100°$. So the shock forces are limited if the vane arm hits one of these stops and the vane arm can never touch the rotor. However, the elasticity of the stop at zero position is neglected for the determination of γ, so it is assumed that $\gamma = 0°$ as long as the vane arm touches this stop.
d) The position of the zero line of the vane arm is chosen such that there is an angle $\varepsilon = 20°$ in between this zero line and the rotor axis.
e) The geometry of rotor, head and vane are chosen such that the rotor axis for a rotating rotor is perpendicular to the wind for $\gamma = 0°$. The left hand angle in between the rotor axis and the wind direction is called δ. So $\delta = 0°$ and $\alpha = \varepsilon = 20°$ for this condition.
f) The torsion moment at $\gamma = 0°$ is called $M_{spring0}$. The spring constant of the torsion spring is chosen such that the torsion moment for $\gamma = 100°$, $M_{spring100}$, is twice the value as $M_{spring0}$. This ratio is chosen because the moment M_G for the pendulum safety system, produced by the balancing weights at V_{rated}, is also twice the value of M_G at V_d.
g) The eccentricity e in between the rotor axis and the tower axis will be taken rather large with respect to the rotor radius R (e = 0.2 R). The contribution of the side force $F_{s\delta}$ and the self orientating moment M_{so} to the rotor moment M_{rotor} will therefore be rather small. However, they can't be neglected for this ratio in between e and R.
h) The position of the vane axis is chosen such that it coincides with the tower axis. This has as advantage that the vane moment around the vane axis is the same as around the tower axis and this simplifies the moment equations.

In point e it is said that the rotor axis is perpendicular to the wind for $\gamma = 0°$. However, this is only true for a rotating rotor which turns about with the design tip speed ratio. The thrust coefficient for a non rotating rotor is much lower than for a rotating rotor which means that the thrust force and so also M_{rotor}, will be much lower too. This means that the rotor axis will have a negative yaw angle δ when the rotor is not rotating at low wind speeds.

The wind speed for which M_{rotor} is the same as M_{spring} for $\gamma = 0°$, is called the design wind speed V_d. It is chosen that $V_d = 7$ m/s. The rotor will be perpendicular to the wind for wind speeds lower than V_d (as long as the rotor is rotating at a about the design tip speed ratio). This situation for $V = V_d = 7$ m/s is given in figure 3 for a top view of the head.

The wind speed for which the rotational speed, the thrust and the power have a maximum, is called the rated wind speed V_{rated}. V_{rated} is determined in chapter 6 of KD 409 and it appears that V_{rated} is rather high for the chosen characteristics of the torsion spring. For very high wind speeds, the angle α in between the wind direction and the vane blade will be very small and the yaw angle δ will therefore be almost 80° for $\gamma = 100°$.

The rotor will turn out of the wind for wind speeds higher than V_d. The yaw angle δ depends on the undisturbed wind speed V. The situation for a wind speed V = 10.775 m/s (see KD 409 table 3) is given in figure 4 for a top view of the head. In table 3 of KD 409 it can be seen that δ = 30°, α = 8.44° and γ = 41.56° for V = 10.775 m/s.

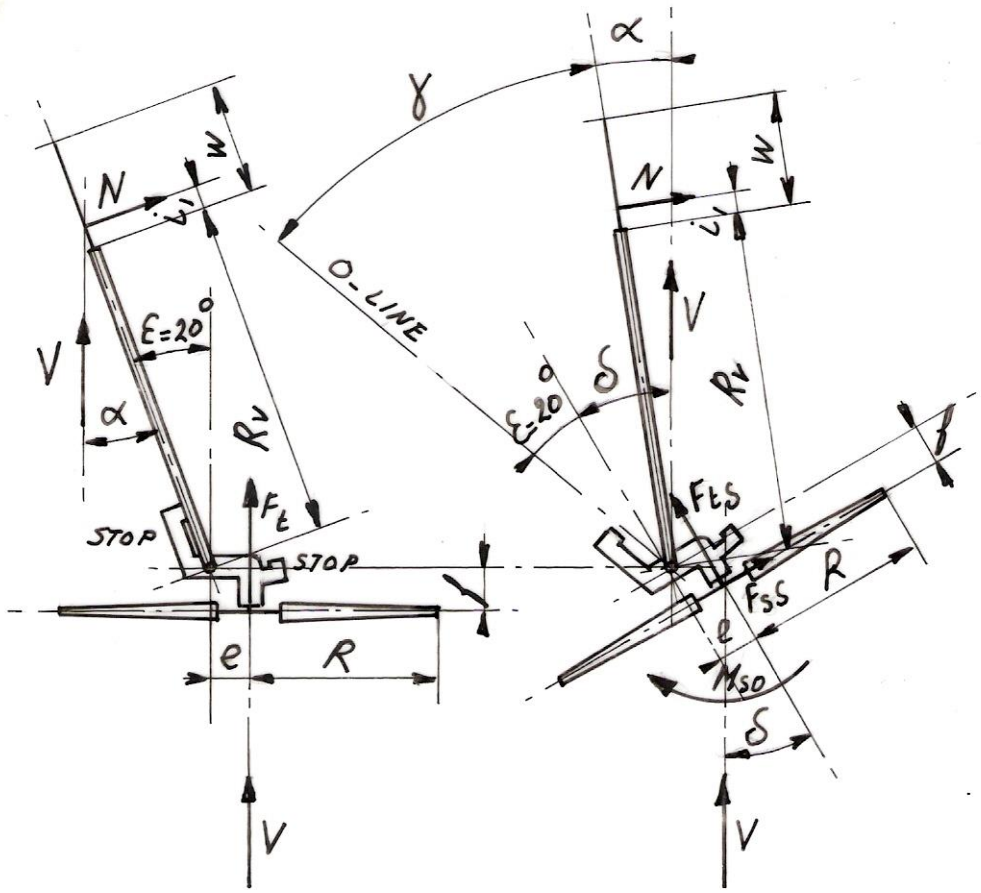

fig. 3 Situation for V = V_d = 7 m/s fig. 4 Situation for V = 10.775 m/s

The calculated δ-V curve for the chosen parameters is given in figure 9 of KD 409. This figure is copied as figure 5.

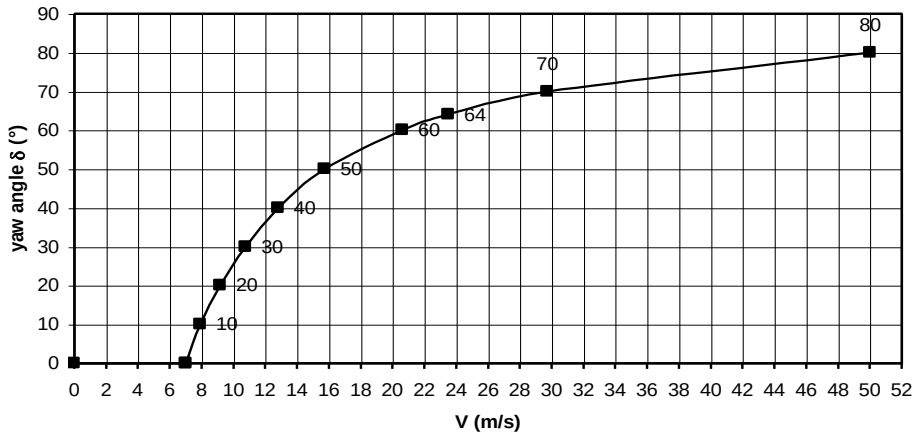

fig. 5 Calculated δ-V curve for the ecliptic safety system with a torsion spring and V_d = 7 m/s

In figure 5 it can be seen that the calculated δ-V curve has about the same shape as the ideal δ-V curve of figure 1. The main difference is that the curve of figure 5 is not starting perpendicular to the V-axis.

3.2 Hinged side vane safety system (see KD 213, ref. 4 and KD 223, ref. 5)

For this safety system two KD reports are available. Report KD 213 is for a rotor with wooden blades and a Gö 623 airfoil. Report KD 223 is for a rotor with steel blades and a 7.14 % cambered airfoil. The self orientating moment for a rotor with a 7.14 % cambered airfoil is about a factor two higher than for a rotor with a Gö 623 airfoil and this results in a different formula for the rotor moment M_{rotor}. The theory used in both reports is identical. In this report KD 485, I will pay attention only to report KD 213. The geometry which will be described is used in all present VIRYA windmills although the geometry is not exactly congruent for all types. The eccentricity e has to be taken rather large with respect to the rotor diameter D because the so called self orientating moment M_{so} has to be over powered. The ratio e / D must be taken not smaller than 0.08 (8 %) if a 7.14 % cambered airfoil is used and not smaller than 0.05 (5 %) if a Gö 623 airfoil is used.

The vane arm is making an angle ϕ_1 = 45° with the rotor axis and therefore the vane blade juts out left from the rotor plane. The vane blade is hanging on two or three hinges which are connected to a strip which makes an angle of 15° backwards with the vane arm. The hinge axis therefore makes an angle ϕ_2 = 30° with the rotor axis. If there is no wind, the vane blade is hanging vertical because of its weight. The geometry of rotor and head are chosen such that the rotor moment M_{rotor} and the vane moment around the tower axis M_{vt} are in balance for very low wind speeds if the rotor is perpendicular to the wind.

The vane moment is caused by the aerodynamic force working on the vane blade and by the aerodynamic force working on the vane arm. At low wind speeds the aerodynamic force on the vane arm can be neglected. If the rotor is perpendicular to the wind, the side force on the rotor and the self orientating moment are both zero and so the balance of moments around the tower axis is only determined by the rotor thrust and the aerodynamic force on the vane blade.

The balance of moments around the vane hinge axis is determined by the aerodynamic normal force N working on the vane blade and by the vane weight G. For low wind speeds, N is only little and therefore the vane blade will make a little angle θ with the vertical position. The horizontal component of N, N cosθ, has then almost the same value as N which means that the rotor moment and the vane moment will increase by the same factor if the wind speed increases. This means that the rotor stays perpendicular to the wind if this true at very low wind speeds. However, at angles θ larger than about 25°, N cosθ becomes substantially lower than N and therefore the rotor moment will increase more than the vane moment. Above the wind speed where this happens, the rotor will turn out of the wind gradually. The wind speed where the rotor starts to turn out of the wind is determined by the ratio in between the vane blade weight and the vane blade area. At very high wind speeds the vane blade position is almost horizontally and the horizontal component of N is much lower than N. Then the rotor turns out of the wind by about 75°.

The vane blade has no stop for the vertical position but it has a stop for the almost horizontal position. This stop prevents that the normal force can become negative during heavy wind gusts. If the normal force can not become negative, flutter of the vane blade is prevented which otherwise could happen at high wind speeds if the van arm is too flexible.

The system can only be described well at low and at high wind speeds but it appears to function well also at moderate wind speeds if the vane blade is square or almost square and if the eccentricity e is not taken too low. The hinged side vane safety system is given for low wind speeds in figure 1 and for high wind speeds in figure 2 of report KD 213. Both figures together are copied as figure 6.

Because the vane blade juts out left from the rotor it is in the undisturbed wind speed. Therefore, to realise a certain force, a much lower area is required than for a vane blade placed in the rotor wake. Because the vane arm is integrated with the head, the moment of inertia of the head around the tower axis is very large. The light vane blade will move fast during wind gusts but the head will follow only slowly. This limits the gyroscopic moments in the blades and in the rotor shaft. At high wind speeds only a little change of the yaw angle δ is required to come to a new balance of moments. Therefore the system is very stable at high wind speeds.

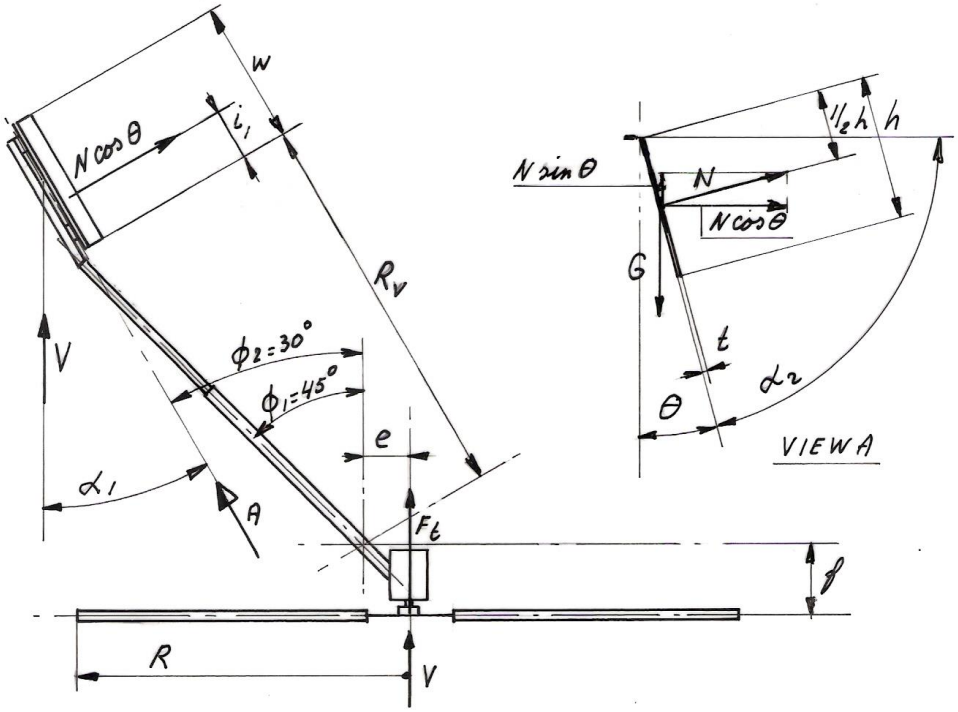

figure 1 The hinged side vane safety system for low wind speeds

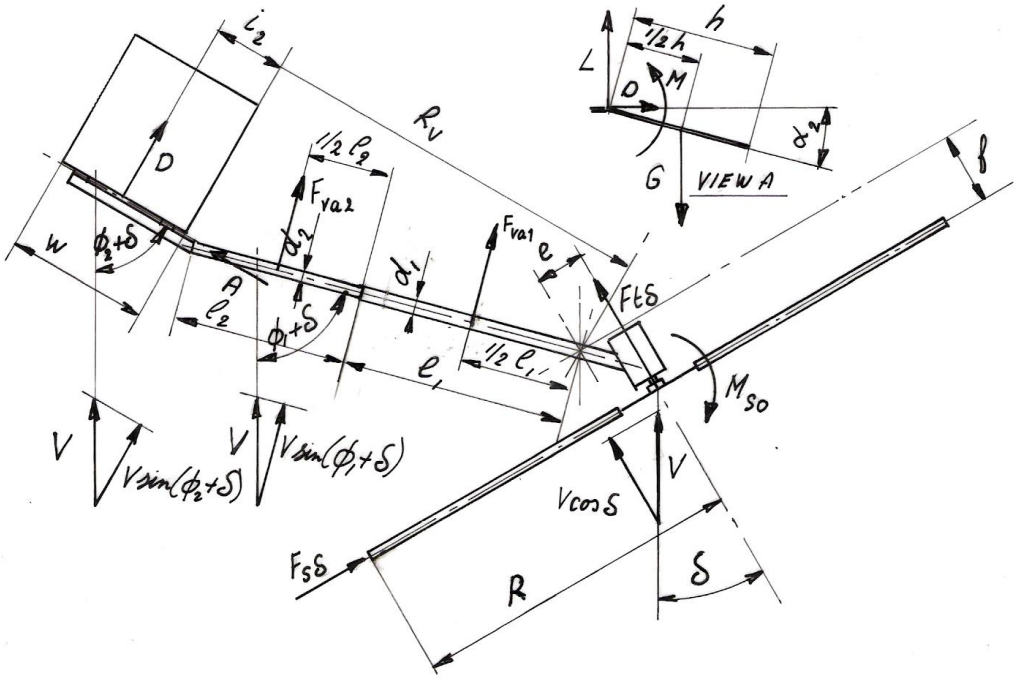

figure 2 The hinged side vane safety system for high wind speeds

fig. 6 Hinged side vane system for low (upper picture) and high (lower picture) wind speeds

The δ-V curve of the VIRYA-4.2 was estimated and the estimated curve was checked by iteration using the moment equations around the tower axis and the vane hinge axis. It was found that the δ-V curve which was found by iteration is lying close to the estimated δ-V curve for a vane blade made out of 9 mm plywood. The estimated curve for the VIRYA-4.2 windmill is given in figure 5 of KD 213. This figure is copied as figure 7.

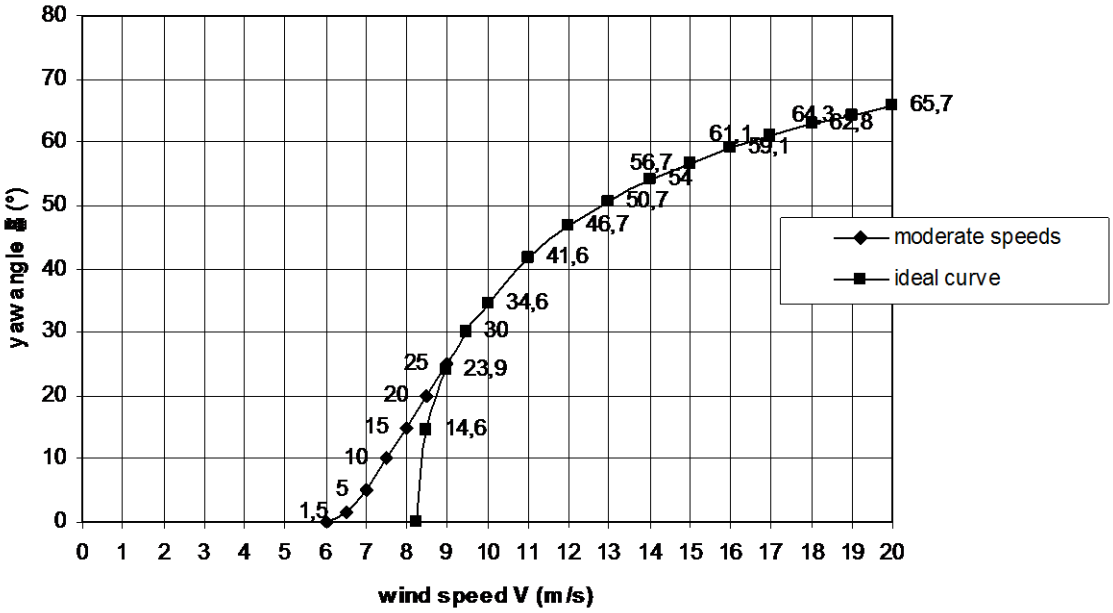

fig. 7 Estimated δ-V curve of the VIRYA-4.2 windmill

The δ-V curve follows the ideal curve for V > 9.5 m/s. The rotor is perpendicular to the wind for V < 6 m/s. For wind speeds in between 6 m/s and 9.5 m/s the curve ”moderate speeds” is valid. The theoretical rated wind speed is the wind speed V = 8.23 m where the ideal curve intersects with the V-axis. The real rated wind speed is the wind speed V = 9.5 m/s above which the ideal curve is followed. In figure 7 it can be seen that the δ-V curve of the hinged side vane safety system is lying close to the δ-V curve of figure 1 if the part of the curve for moderate wind speeds is included.

Every safety system has certain advantages and disadvantages. The main advantages of the hinged side vane safety system are:

1) It is simple and cheap.
2) It has a δ-V curve which is lying close to the ideal δ-V curve.
3) The hinge axis is loaded only lightly and therefore simple door hinges can be used.
4) The vane blade is situated in the undisturbed wind and therefore a relatively small vane blade area is required to generate a certain aerodynamic force.
5) The moment of inertia of the head is large resulting in low yawing speeds and so large gyroscopic moments at high wind speeds are prevented.

The main disadvantages of the hinged side vane system are:

1) There must be a certain ratio in between the vane area and the vane weight if a certain rated wind speed is wanted. Therefore it appears to be difficult to make a large vane blade stiff enough. The hinged safety system is therefore limited to windmills with a maximum rotor diameter of about 5 m.
2) The system is sensible to flutter of the vane blade, if the vane blade and the vane arm are not made stiff enough. Flutter is suppressed effectively using a vane blade stop at the almost horizontal position of the vane blade
3) It is difficult to turn the head out of the wind permanently by placing the vane blade in the horizontal position because this vane blade is positioned far form the tower and far from the ground.

It is expected that the hinged side vane safety system can be used in regions with maximum wind speeds of about 35 m/s. The maximum wind speed which has been measured at the test side of Kragten Design is 26 m/s, so it is proven that the hinged side vane system works well at least up to this wind speed.

3.3 Inclined hinge main vane safety system (see report KD 431, ref. 6).

The inclined hinge main vane system is used in traditional water pumping windmills like windmills of manufacture Southern Cross. It was also used in some of the water pumping windmills which were developed by the former CWD (Consultancy Services Wind Energy Developing Countries). It is also used in several electricity generating wind turbines like the wind turbines of the Dutch manufacture Fortis and the windmills designed by Hugh Piggott.

The inclined hinge main vane system can be used in combination with an eccentrically placed rotor or with a centrally placed rotor and an auxiliary vane. Only the use in combination with an eccentrically placed rotor will be taken into account. For electricity generation wind turbines, the eccentricity e has to be taken rather large with respect to the rotor diameter D because the so called self orientating moment M_{so} has to be over powered. The ratio e / D must be taken not smaller than 0.08 (8 %) if a 7.14 % cambered airfoil is used and not smaller than 0.05 (5 %) if a Gö 623 airfoil is used. For windmills with a design tip speed ratio below 2, the ratio e / D can be taken smaller because M_{so} is almost zero.

The main feature of the inclined hinge main vane safety system is that the main vane is turning around a vane axis which makes a small angle with the tower axis. The vertical tower axis is called the z-axis. The inclined vane axis is called the s-axis. It is assumed that both axises intersect. The angle in between both axises is called ε. The geometry is given in figure 8.

Provisionally it is assumed that $\varepsilon = 15°$. The plane through the s-axis and the z-axis is making an angel ϕ_1 with the rotor axis. Provisionally it is chosen that $\phi_1 = 25°$. This angle is necessary to realise that the rotor is about perpendicular to the wind direction at low wind speeds.

For traditional water pumping windmills, the vane arm is about horizontal and the vane blade is therefore normally positioned in the rotor shadow. However, it comes out of the rotor shadow at high wind speeds. The wind speed at the vane blade is reduced by the rotor shadow and it is very difficult to describe the system for this vane orientation because the wind speed at the vane blade is not known. For electricity generating wind turbines, the vane arm is normally making an angle of about 45° with the horizon and therefore the vane blade juts above the rotor and is positioned in the undisturbed wind speed V. For this vane orientation, the system can be described much easier and this vane orientation is therefore used in report KD 431 to describe the inclined hinge main vane system.

When the wind speed is zero, the vane is hanging in the lowest position and is therefore in the plane through the s-axis and the z-axis. As soon as a certain aerodynamic force F_v is exerted perpendicular to the vane blade, the vane will turn away right hand if seen from above. F_v is lying in an inclined plane which is perpendicular to the s-axis. The angle, over which the vane moves in this plane from the lowest position, is called γ. The lowest position is called the zero line in figure 8. The aerodynamic force acting on the vane arm is neglected. F_v is working on a distance R_v from the s-axis. The plane in which F_v moves has a certain point of intersection with the s-axis. The distance in between this point and the z-axis is called h. The total weight G of vane arm and vane blade is acting in the centre of gravity which is lying at a distance R_G from the s-axis.

The rotor turns out of the wind left hand if seen from above because of the rotor moment M_{rotor}. This rotor moment is mainly determined by the rotor thrust $F_{t\delta}$ and the eccentricity e but the side force on the rotor $F_{s\delta}$ in combination with the distance f in between the rotor plane and the tower axis and the so called self orientating moment M_{so} also have a certain influence. The angle in between the rotor axis and the wind direction is called δ. For very low wind speeds, δ is negative.

The vane arm is making an angle ϕ_2 with the vane axis. Provisionally it is assumed that $\phi_2 = 30°$. Because it was assumed that the vane axis is making an angle $\varepsilon = 15°$ with the z-axis, the angle in between the vane arm and the z-axis is 45° when the vane arm is in its lowest position. If the vane arm is chosen long enough, the vane blade will therefore jut above the rotor plane and will be streamed by the undisturbed wind speed V. The vane blade is square and will be connected to the vane arm such that two sides are vertical and two sides are horizontal when the vane arm is in its lowest position.

The geometry of rotor, head and vane will be chosen such that the vane can rotate 360° without touching the rotor. Therefore no stops will be necessary. This geometry has been chosen for a small 1 m diameter battery charging windmill called Wesp (Wasp in English) which was developed at the Wind Energy Group of the UT-Eindhoven in about 1980 by a student who I have guided.

I succeeded in deriving the moment equations around the tower axis and around the hinge axis. However, the formulas could not be integrated such that one formula remains which gives the yaw angle δ as a function of V. Therefore it was not possible to predict a certain δ-V curve for certain chosen parameters. Probably it is possible to check an estimated δ-V curve by iteration in the same way as this was done for the hinged side vane safety system.

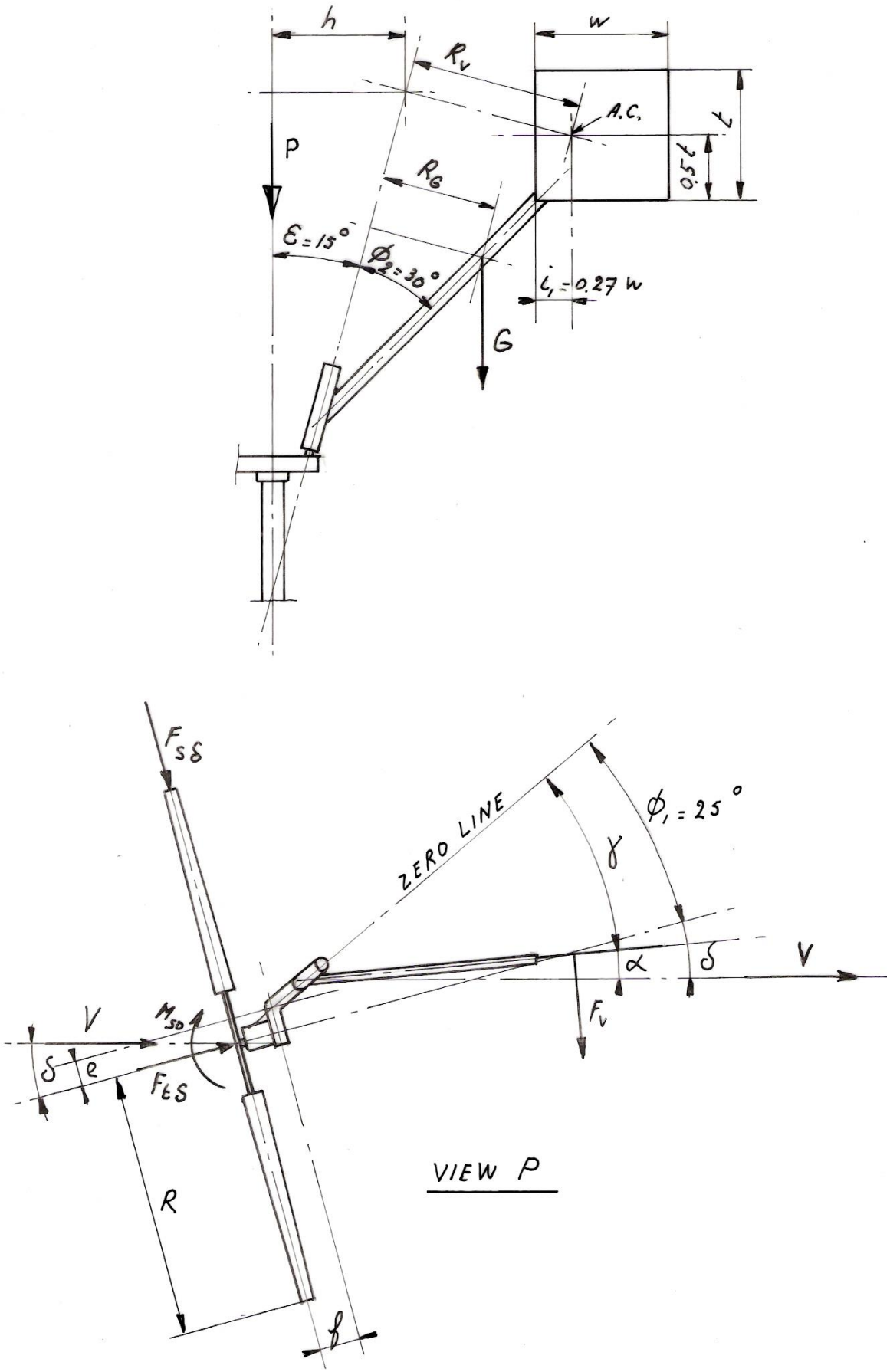

figure 8 The inclined hinge main vane safety system

3.4 Pendulum safety system (see report 377, ref. 7)

The safety system is called the pendulum safety system because the whole assembly of rotor, head and balancing weights is swinging on top of the tower like the pendulum of a clock. The horizontal hinge axis is intersecting with the tower axis. The eccentricity e in between the rotor axis and the hinge axis is taken larger than the rotor radius R and the place of the hinge axis can therefore be chosen such that it is lying in the rotor plane.

On a yawing fast running rotor there is a thrust force $F_{t\delta}$, working in the direction of the rotor shaft and a side force $F_{s\delta}$ working in the direction of the rotor plane. This side force is giving no moment around the hinge axis if the hinge axis is lying in the rotor plane. The side force can therefore be neglected concerning the balance of moments around the hinge axis. On a yawing fast running rotor there is also working a so called self orientating moments M_{so} which has a tendency to decrease the yaw angle. This moment is maximal for a yaw angle of about 30° and it partially neutralizes the moment which is produced by the thrust. However, if the eccentricity is taken very large, like it is done for the pendulum safety system, the self orientating moment is very small with respect to the moment caused by $F_{t\delta}$ and the self orientating moment can therefore also be neglected. So the whole aerodynamic moment of the rotor M_{rotor} around the hinge axis is now only caused by the rotor thrust $F_{t\delta}$.

Apart from the aerodynamic moment M_{rotor}, there is also a moment working around the hinge axis which is caused by the weight of the rotor, the generator, the swinging parts of the head and the balancing weights. All these parts together result in a total weight of the swinging parts G, acting at the centre of gravity which is lying at a certain radius r_G from the hinge axis. The centre of gravity also has a certain position with respect to the rotor plane and this position depends on the position of the balancing weights.

As the eccentricity e is chosen very large, the balancing weight must be large and the value of r_G will be rather large too. It is assumed that two balancing weights are used and that each balancing weight is mounted to an arm which is swinging along the upper part of the tower. Now the rotor can be compared to the sail of a sail boat and the balancing weights can be compared to the keel. For a sail boat the sail is vertical if there is no wind but this seems to be not the optimum condition for the pendulum safety system because this will result in power reduction for wind speeds where it is not yet necessary. After some investigation it is found that the system is more optimal if the rotor has a negative yaw angle of 20° if the wind speed is 0 m/s. This angle is called the pre-angle $\varepsilon = 20°$. So the position of the centre of gravity of the swinging parts of the head has to be chosen such that the centre of gravity is lying exactly below the hinge axis for $\delta = -20°$. The clock wise angle in between the horizon and the rotor axis is called δ.

If the rotor moves backwards because of the rotor thrust, the centre of gravity will move forwards. The clock wise angle in between the vertical and the line through the centre of gravity and the hinge axis is called α. In figure 9 all values are given for an angle $\delta = 10°$ corresponding to an angle $\alpha = 30°$. The real balancing weights and the arms are not given in this figure. Only the resulting weight G is given in the centre of gravity.

The physical and mathematical description of the pendulum safety system is the simplest of all five safety systems described in this report KD 485. However, one has to choose a certain design wind speed. The design wind speed V_d is defined as the wind speed for which $\delta = 10°$. Figure 9 gives the position of the head for $V = V_d$.

The moment which is exerted by the weight G around the hinge axis is maximum for $\alpha = 90°$ and has just halve the maximum value for $\alpha = 30°$. This means that the rotor thrust for $V = V_d$ has just half the value of the value for $\alpha = 90°$ (and $\delta = 70°$).

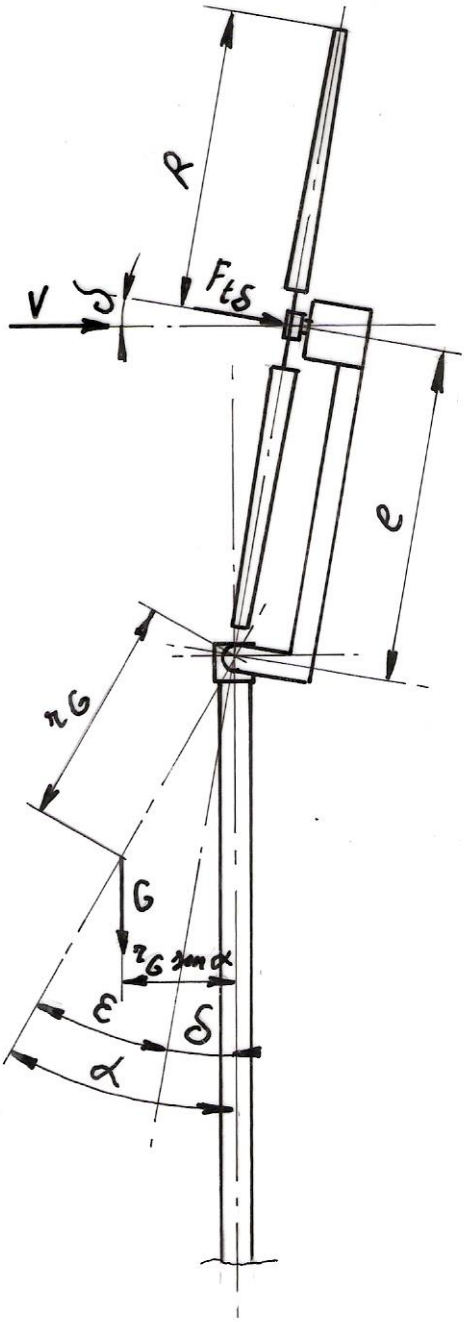

fig. 9 The pendulum safety system for δ = 10° belonging to V = V_d

The calculated δ-V curve for V_d = 7 m/s is given in figure 3 of KD 377. This figure is copied as figure 10.

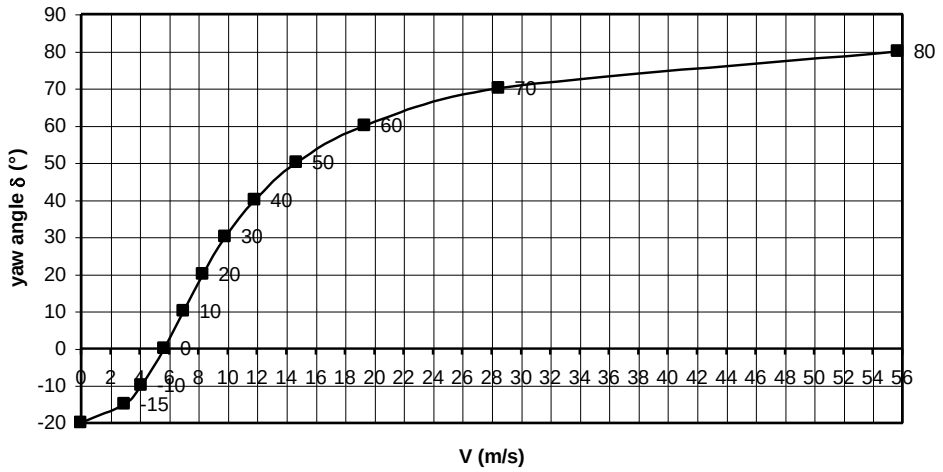

fig. 10 Calculated δ-V curve for the pendulum safety system for V_d = 7 m/s

If figure 10 is compared to figure 1 it can be seen that the difference is large, especially at low wind speeds. But this is because the system is moving from zero wind speed. An advantage of the pendulum safety system is that it can be turned out of the wind manually by 90° and the forces acting on the rotor for this so called helicopter position, are very low. Therefore it is claimed that the pendulum safety system can be used in areas where tornados may occur.

3.5 Pendulum safety system with a torsion spring and e = 0.2 R (see report KD 439, ref. 8)

The safety system is called the pendulum safety system because the whole assembly of rotor, generator and beam is swinging on top of the tower like the pendulum of a clock. The horizontal hinge axis is intersecting with the tower axis. For the eccentricity e in between the rotor axis and the hinge axis it is chosen that e = 0.2 R. This is rather small if compared to the original pendulum safety system as described in report KD 377 but the same as for the VIRYA-4.2 which is equipped with the hinged side vane system. For e = 0.2 R it is no longer allowed to neglect the contribution of the self orientating moment M_{so} to the rotor moment M_{rotor}. However, it is assumed that the contribution of the side force on the rotor $F_{s\delta}$ can be neglected. So it is assumed that M_{rotor} is only determined by the rotor thrust $F_{t\delta}$ and the eccentricity e and by M_{so}. The C_{so}-δ curve depends on the airfoil which is used. The formulas for use of a Gö 623 airfoil are given in chapter 3 of KD 439. The formulas for a 7.14 % cambered airfoil are given in chapter 4 of KD 439.

Apart from the aerodynamic moment M_{rotor}, there is also a moment working around the hinge axis which is caused by the weight of the rotor, the generator and the swinging parts of the head. All these parts together result in a total weight of the swinging parts G (in N), acting at the centre of gravity which is lying at a certain radius r_G from the hinge axis. The position of the centre of gravity is lying a bit below the rotor axis because of the beam which connects the generator to the horizontal axis bearing housing. The head geometry is chosen such that angle α_0 in between r_G and the rotor plane is 30°. The right hand angle in between r_G and the vertical plane is called α. The right hand angle in between the rotor plane and the vertical plane is called δ. The geometry is given in figure 3 of KD 439 which is copied as figure 11. Figure 11 is drawn for a yaw angle δ = 50° belonging to a wind speed V = 14.82 m/s (see KD 439, table 1).

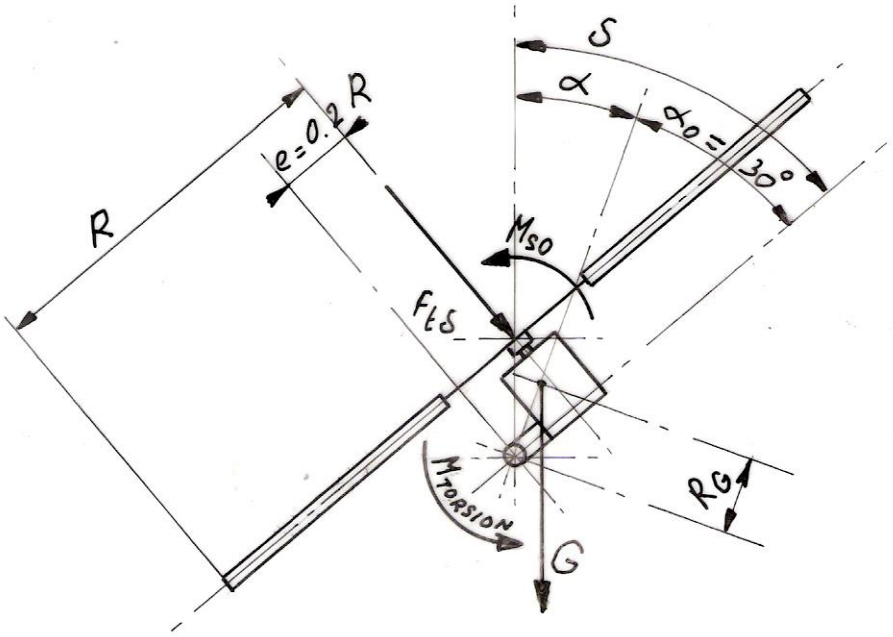

fig. 11 Side view of the pendulum safety system with a torsion spring for $\delta = 50°$

The relation in between α, δ and α_0 is given by:

$$\alpha = \delta - \alpha_0 \qquad (°) \qquad (7)$$

So $\alpha = -30°$ for $\delta = 0°$ and $\alpha_0 = 30°$. For $\delta = 0°$, the left hand moment M_G produced by G around the hinge axis is taken positive. The left hand moment M_G is therefore given by:

$$M_G = G * R_G * \sin(-\alpha) \qquad (Nm) \qquad (8)$$

(7) + (8) and $\alpha_0 = 30°$ gives:

$$M_G = G * R_G * \sin(30° - \delta) \qquad (Nm) \qquad (9)$$

M_G has an extreme value $M_{G\ max}$ for $\alpha = 90°$ and for $\alpha = -90°$, so for $\delta = 120°$ and for $\delta = -60°$. So $M_{G\ max}$ is given by:

$$M_{G\ max} = G * R_G \qquad (Nm) \qquad (10)$$

So it is valid that:

$$M_G / M_{G\ max} = \sin(30° - \delta) \qquad (-) \qquad (11)$$

This function is given in figure 12 for $0° < \delta < 90°$.

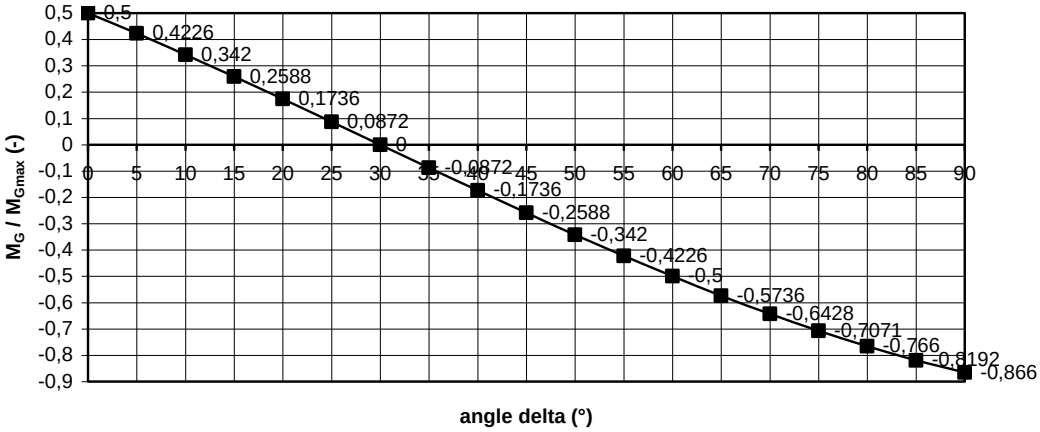

fig. 12 M_G / $M_{G\,max}$ as a function of δ for $\alpha_0 = 30°$

In figure 12 it can be seen that the M_G / M_{Gmax} – α curve is about a straight line for $0° < \delta < 60°$.

Apart from M_{rotor} and M_G there is also working a left hand moment $M_{torsion}$ around the hinge axis caused by the torsion spring. The torsion spring is chosen such that $M_{torsion} = 0$ for $\delta = 0°$. The torsion spring is also chosen such that $M_{torsion} = M_{Gmax}$ for $\delta = 65°$. $M_{torsion}$ increases linear to δ, so $M_{torsion}$ is given by:

$$M_{torsion} = G * R_G * \delta/65° \qquad \text{(Nm)} \qquad (12)$$

The ratio $M_{torsion}$ / M_{Gmax} as a function of δ is given in figure 13.

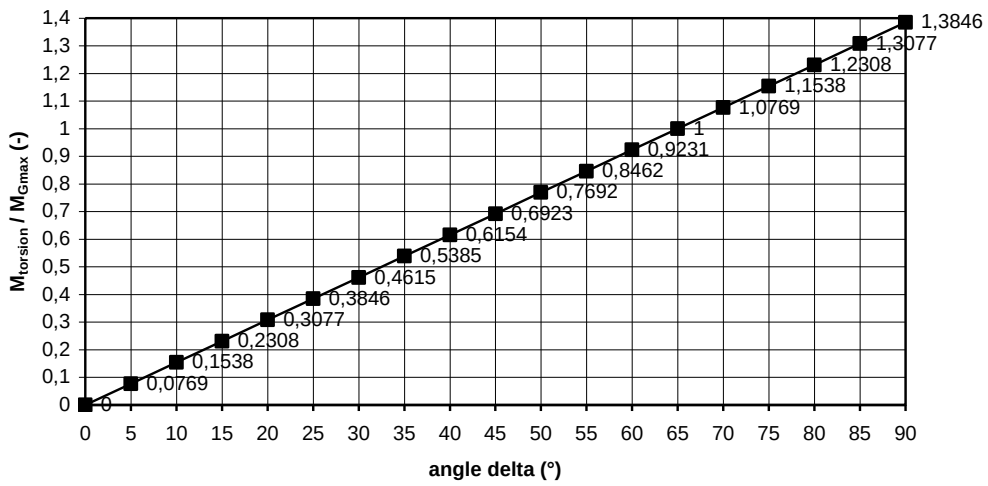

fig. 13 $M_{torsion}$ / $M_{G\,max}$ as a function of δ

The total effect of M_G / M_{Gmax} + $M_{torsion}$ / M_{Gmax} can be shown by adding the curves of figure 12 and figure 13. This results in figure 14.

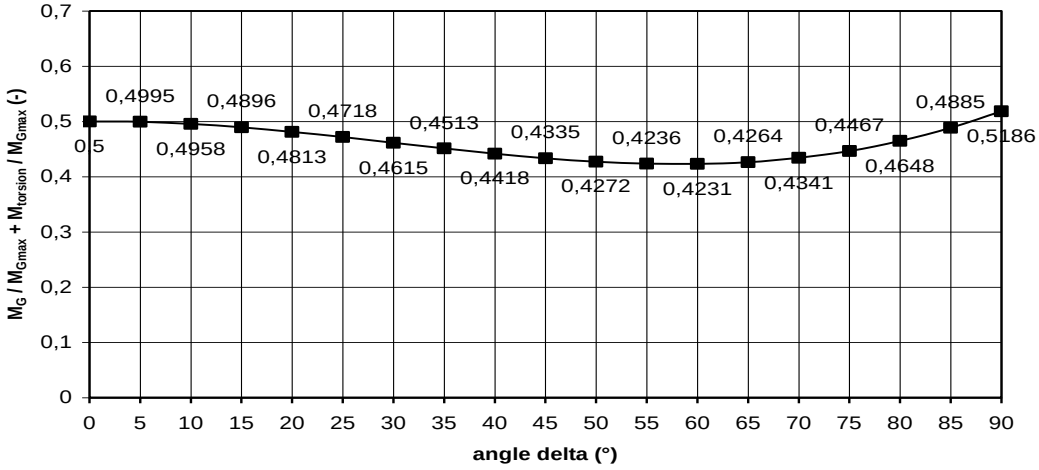

fig. 14 $M_G / M_{Gmax} + M_{torsion} / M_{Gmax}$ as a function of δ

In figure 14 it can be seen that the resulting moment is a little decreasing for $0° < \delta < 60°$. This decreasing partly compensates the self orientating moment. The decreasing curve prevents that the maximum rotational speed and thrust at high wind speeds are too high.

The formula for M_{rotor} in combination with the shape of the curve given in figure 14, finally results in the δ-V curve which is given in figure 7 of KD 439. This figure is copied as figure 15.

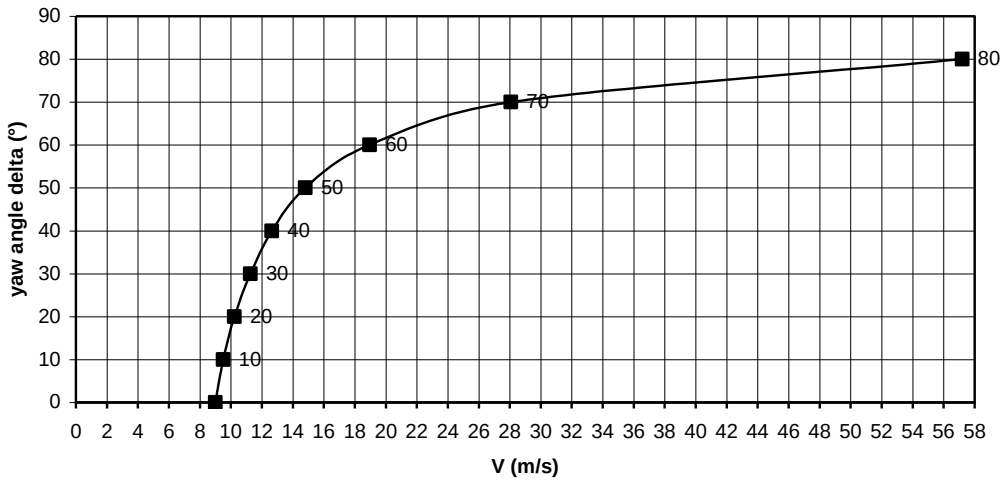

fig. 15 Calculated δ-V curve for the pendulum safety system with a torsion spring and a Gö 623 airfoil for V_d = 9 m/s

If figure 15 is compared to figure 1 it can be seen that the calculated δ-V curve of the pendulum safety system with a torsion spring is almost congruent to the ideal δ-V curve.

4 References

1 Kragten A. Rotor design and matching for horizontal axis wind turbines, January 1999, latest review November 2015, free public rapport KD 35, engineering office Kragten Design, Populierenlaan 51, 5492 SG Sint-Oedenrode, The Netherlands.

2 Kragten A. Safety systems for water pumping windmills, April 1989, report R 999 D, (former) Wind Energy Group, University of Technology Eindhoven, Faculty of Physics, Laboratory of Fluid Dynamics and Heat transfer), 5600 MB Eindhoven, The Netherlands (no longer available).

3 Kragten A. Development of an ecliptic safety system with a torsion spring, February 2009, modified April 2012, free public rapport KD 409, engineering office Kragten Design, Populierenlaan 51, 5492 SG Sint-Oedenrode, The Netherlands.

4 Kragten A. Method to check the estimated δ-V curve of the hinged side vane safety system and checking of the δ-V curve of the VIRYA-4.2 windmill, December 2004, free public report KD 213, engineering office Kragten Design, Populierenlaan 51, 5492 SG Sint-Oedenrode, The Netherlands.

5 Kragten A. Method to check the estimated δ-V curve of the hinged side vane safety system and checking of the δ-V curve of the VIRYA-3.3D windmill (7.14 % cambered steel blades), February 2005, free public report KD 223, engineering office Kragten Design, Populierenlaan 51, 5492 SG Sint-Oedenrode, The Netherlands.

6 Kragten A. Description of the inclined hinge main vane safety system and determination of the moment equations, November 2009, free public report KD 431, engineering office Kragten Design, Populierenlaan 51, 5492 SG Sint-Oedenrode, The Netherlands.

7 Kragten A. Development of a tornado proof pendulum safety system for a medium size wind turbine which turns the rotor out of the wind along an horizontal axis, April 2008, reviewed November 2011, free public report KD 377, engineering office Kragten Design, Populierenlaan 51, 5492 SG Sint-Oedenrode.

8 Kragten A. Development of a pendulum safety system with a torsion spring and e = 0.2 R, March 2010, reviewed September 2011, free public report KD 439, engineering office Kragten Design, Populierenlaan 51, 5492 SG Sint-Oedenrode, The Netherlands.